© DEN HARTOG INDUSTRIES, INC.

Copyright. All information furnished within this document, electronic file or design correspondence is the property of Den Hartog industries, Inc. and shall not be used, disclosed to others or copied without the expressed written consent of Den Hartog Industries, Inc.

CBFD240-42+42-45ST

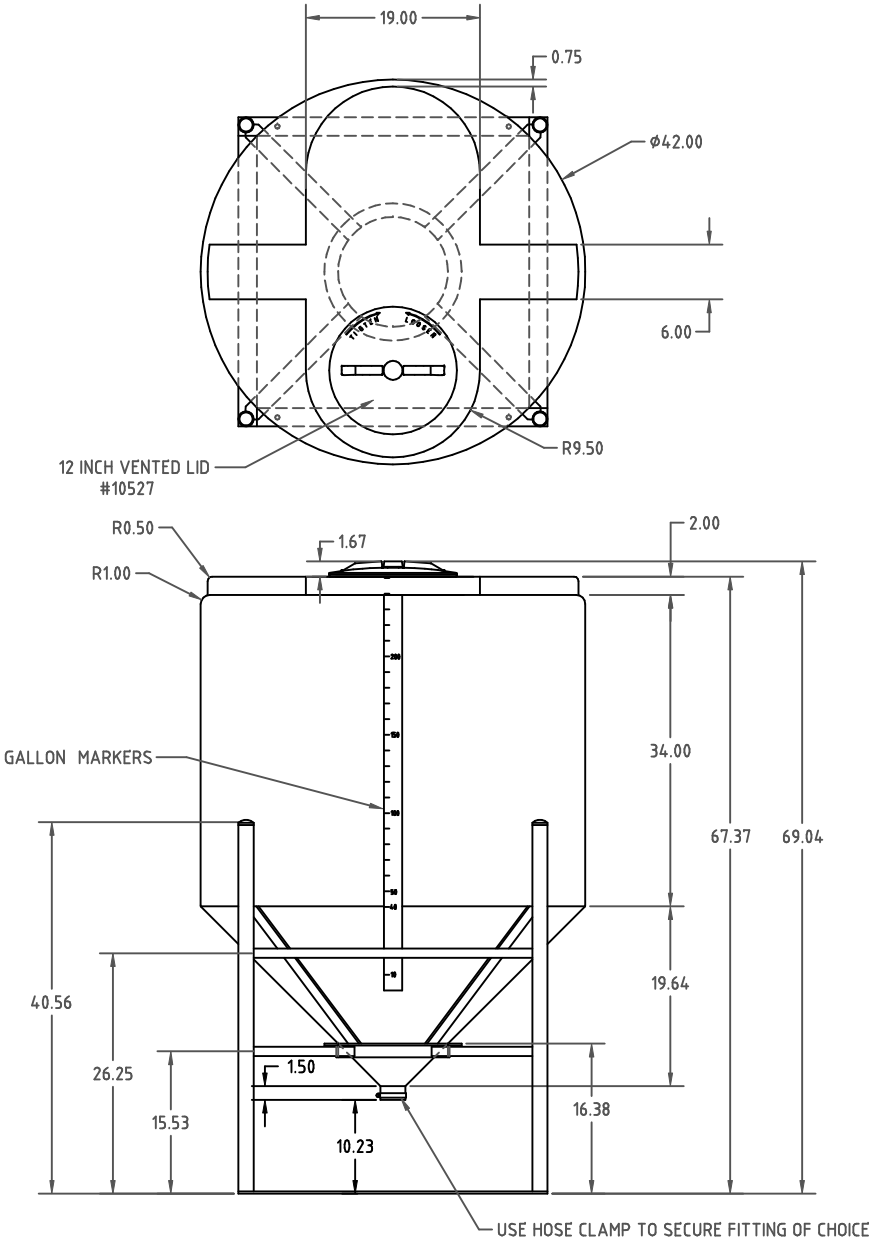

REV	DESCRIPTION	BY / DATE	CCN

ALL DIMENSIONS ARE IN DECIMAL INCHES
TOLERANCES UNLESS OTHERWISE SPECIFIED

POLYETHYLENE	METAL
±1% @ 68° F	DECIMAL ± .125" FRACTION ± 1/4" ANGLE ± 1°

THIRD ANGLE PROJECTION
ANSI 14.5M

DRAWN / DATE: DHJ 5/24/10

APPRD. / DATE: REH 5/26/10

SHOT WEIGHT: TANK 75 LBS.

SHIPPING WEIGHT: TANK+STAND 159 LBS.

FINISH: STAND BLACK POWDER COAT

MATERIAL
TANK
MEDIUM DENSITY
POLYETHYLENE

STAND
MILD STEEL

NOTES:

Den Hartog
INDUSTRIES, INC.
Ace Roto-Mold Injection Molding Blow Molding Sowjoy
4010 HOSPERS DRIVE S. BOX 425, HOSPERS, IOWA 51238-0425

DESCRIPTION: 240 GALLON FULL DRAIN CONE BOTTOM TANK AND STAND

SCALE: N.S.

PART NO. CBFD240-42+42-45ST